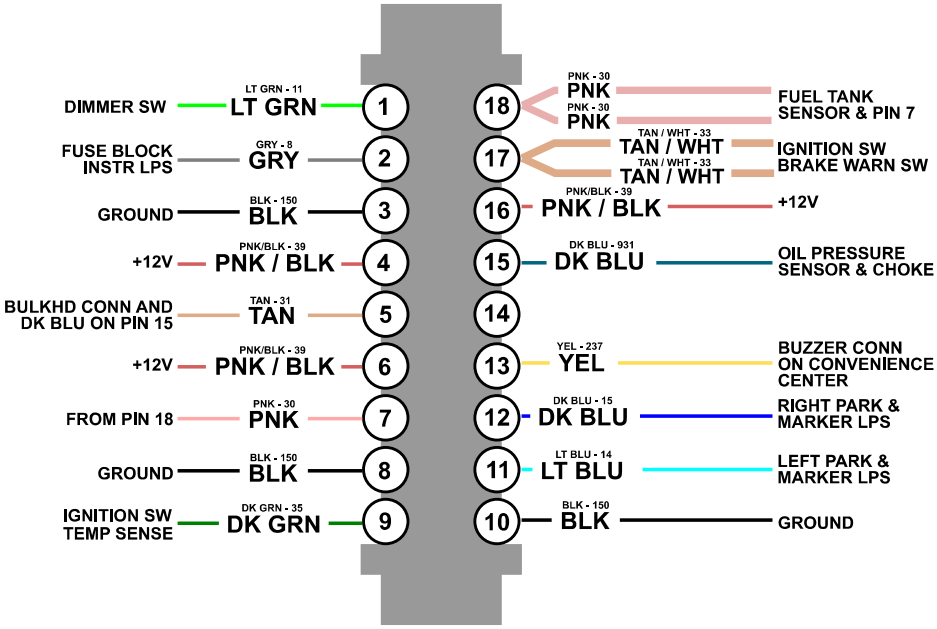

INSTRUMENT CLUSTER CONNECTOR PINOUT