There is a female blade recepticle on the LH side only in my fuse panel.

I have a single ign. wire here

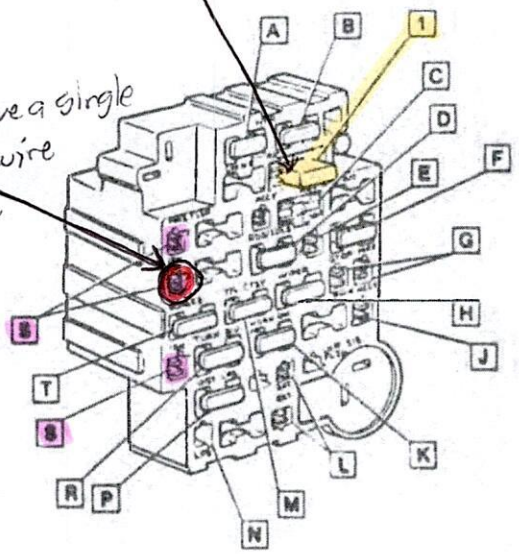


- 1 CIRCUIT BREAKER
- A FUSE-CHOKE
- B FUSE-HEATER OR AIR COND
- C FUSE-AUX HEATER OR AIR COND
- D FUSE-RADIO
- E RECEPTACLE &C69
- F FUSE-STOP, HAZARD LAMPS
- G RECEPTACLE-POWER ACCESSORY
- H FUSE-WINDSHIELD WIPER
- J RECEPTACLE &AU3/A33
- K FUSE-HORN, DOME LAMP
- L RECEPTACLE &T63/UF2/U35
- M FUSE-TAIL, CTSY LAMP
- N RECEPTACLE-&T63
- P FUSE-INSTRUMENT PANEL LAMPS
- R FUSE-TURN, BACK UP LAMPS
- S RECEPTACLE &K30/LF9/HL2/HX1/H38/H40/U16
- T [illegible]

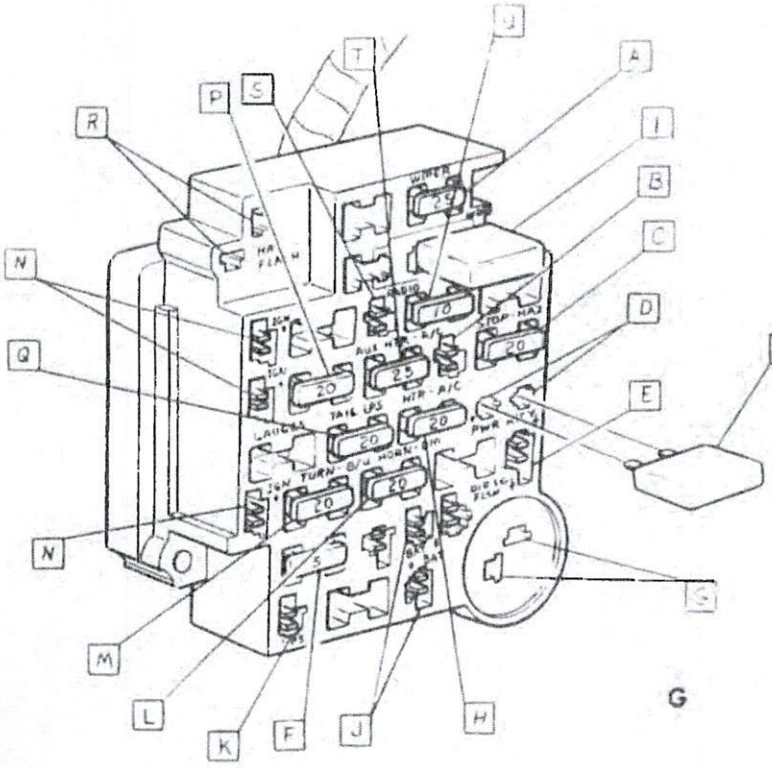


- 1 CIRCUIT BREAKER
- A FUSE-WINDSHIELD WIPER
- B RECEPTACLE-IGN ACC-RADIO & AUX BAT.
- C FUSE-STOP & TRAF HAZARD LPS
- D POWER ACCESSORY
- E RECEPTACLE-POWER DOOR LOCKS
- F FUSE-INST PANEL LAMPS
- G RECEPTACLE-DIR SIG LP FLASHER
- H FUSE-HEATER & A/C
- J RECEPTACLE-BAT, LTR, RDO CAPAC. CLOCK, H/L WARNING
- K RECEPTACLE-PNL LPS, RAD DIAL, TRANS IND LP & TILT WHEEL.
- L FUSE-HORN DM
- M FUSE-DIR SIG & BACK-UP LAMPS
- N RECEPTACLE-IGN-AUTO TRANS. CRUISE CONTROL, PULSE WIPER, TRANS IND LP
- P FUSE-GAUGES
- Q FUSE-TAIL LAMPS
- R RECEPTACLE-TRAFFIC HAZARD FLASHER
- S RECEPTACLE-IGN/ACC REAR AIR COND AUX HEATER
- T FUSE-AUX HEATER & A C
- U FUSE-RADIO

Fig. 8A-1--Fuse Panel